THIS PRINT IS PROVIDED ON A RESTRICTED BASIS AND IS NOT TO BE USED IN ANY WAY DETRIMENTAL TO SOLAR TURBINES INCORPORATED.

REVISION HISTORY

REV	DESCRIPTION	DATE	APPROVED
0	0	0	0
0.1		03/19/26	A.ABENGOZA

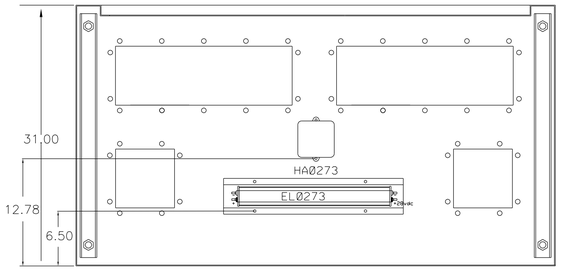

SECTION A—A

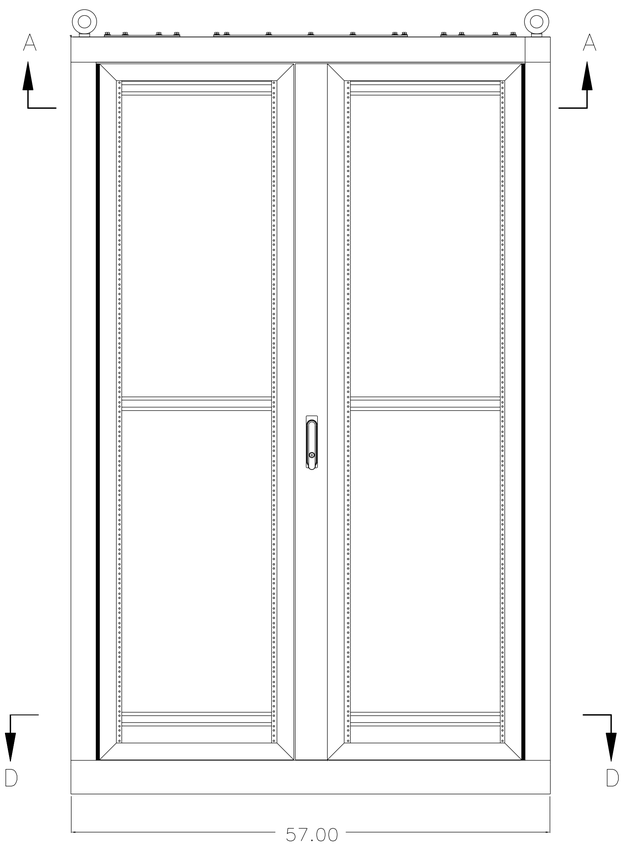

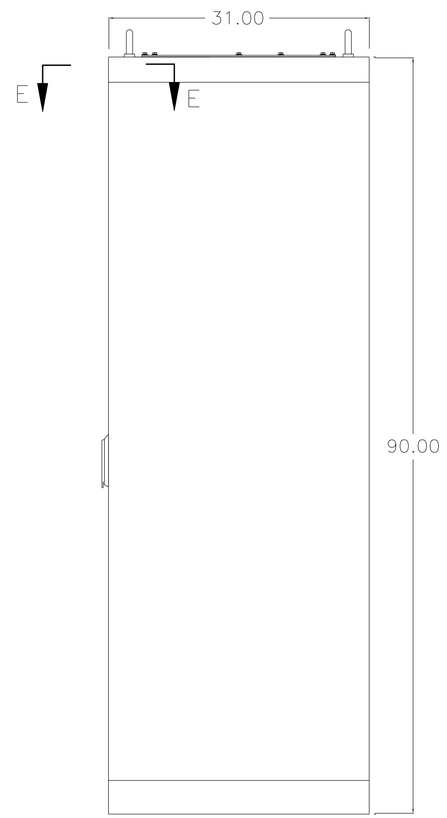

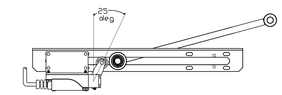

SECTION E—E

Scale 2X
Rotated 90 deg.

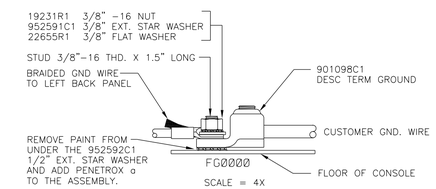

TYPICAL GROUND STUD ASSEMBLY

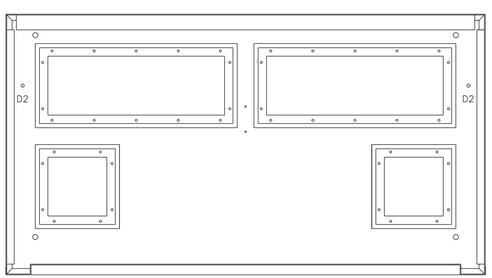

SECTION D—D

CONSOLE: 1006914-207

CATERPILLAR CONFIDENTIAL GREEN

"THIS COPYRIGHTED WORK AND THE INFORMATION HEREIN IS PROPRIETARY TO CATERPILLAR INC., SOLAR TURBINES INCORPORATED, AND/OR SUBSIDIARIES OF EITHER WITHOUT EXPRESS WRITTEN PERMISSION FROM CATERPILLAR INC. OR SOLAR TURBINES INCORPORATED, ANY COPYING, DISCLOSURE, OR USE EXCEPT THAT FOR WHICH IT IS LOANED, IS PROHIBITED."

DATA CONTROL LEVEL	RELEASE STAMP	SIZE	CAGE NO.		
1	PD- J1640	D	66195	Solar Turbines A Caterpillar Company	P.O. BOX 85376 San Diego, California 92186-5376
		MFG DES ENGINEER: A.ABENGOZA	DATE: 11/21/25	DRAWING TITLE: ASSEMBLY CONSOLE	
		DESIGN ENGINEER: D.JOHN	DATE: 11/21/25		

PROJECT NAME: TALOS EW1003 PRINCE

PANEL NO: Ø

MODEL: CTLM02 TURBOTRONICS 4

DWG NO. J1640-PH

SHT REV 0.1

LOC: T:\PROJECT\LAYOUT\REV\

DWG REV Ø.1

SHEET 1 OF 15

THIS PRINT IS PROVIDED ON A RESTRICTED BASIS AND IS NOT TO BE USED IN ANY WAY DETRIMENTAL TO SOLAR TURBINES INCORPORATED.

REVISION HISTORY

REV	DESCRIPTION	DATE	APPROVED
0	0	0	0
0.1		03/19/26	A.ABENGOZA

DOOR PANELS

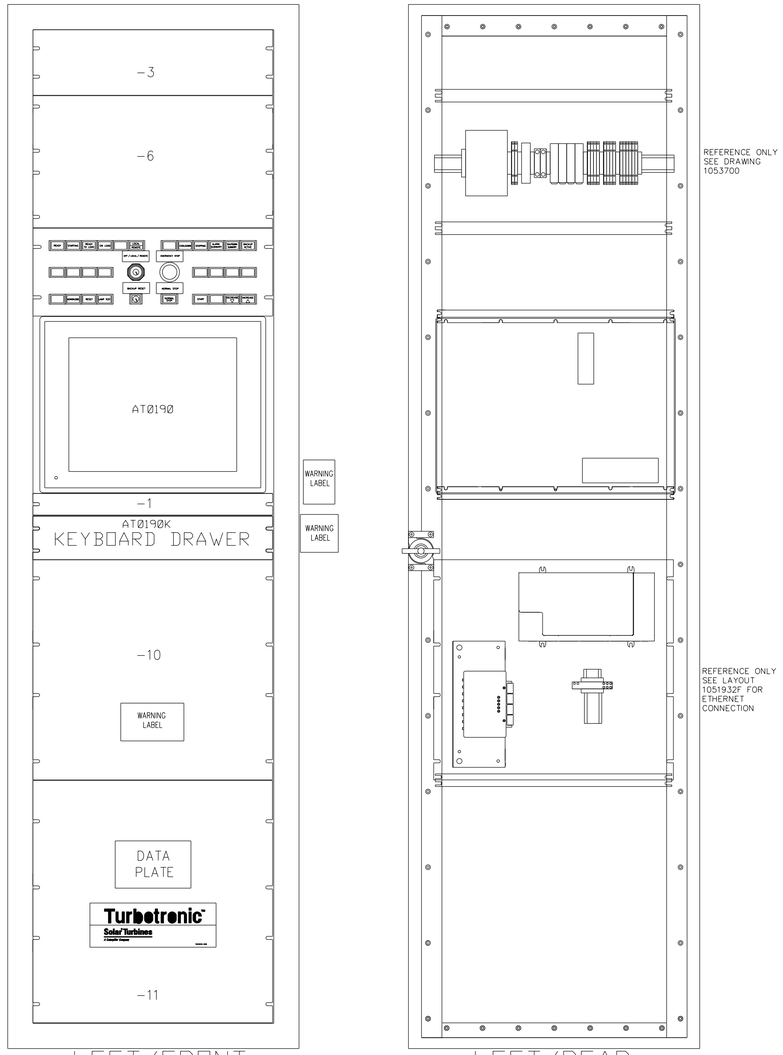

LEFT/FRONT

LEFT/REAR

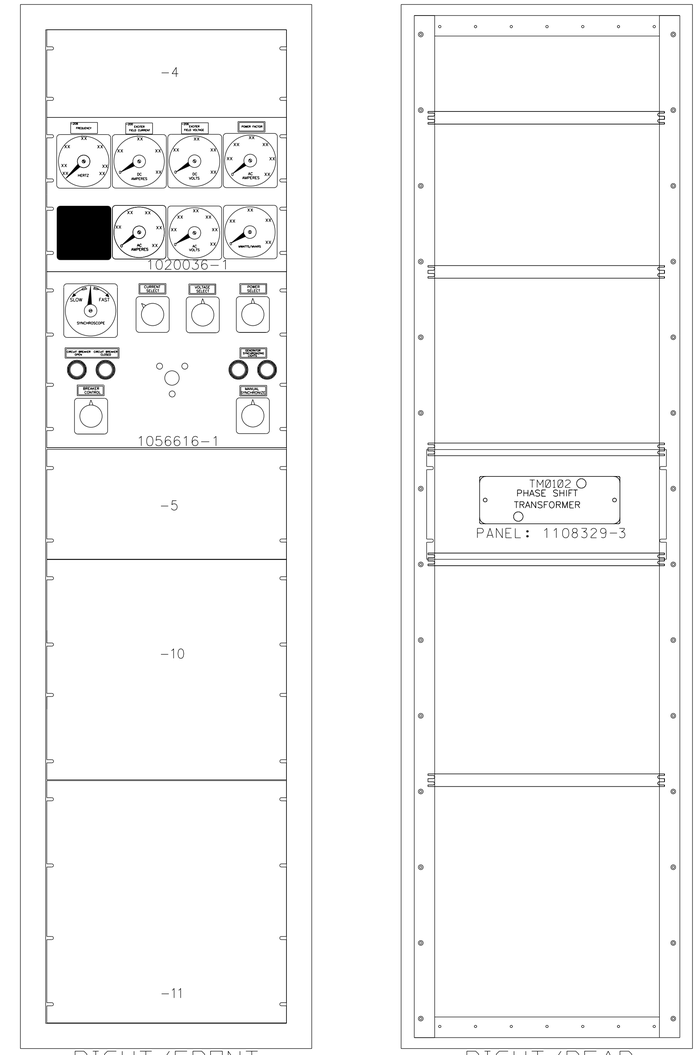

RIGHT/FRONT

RIGHT/REAR

CATERPILLAR CONFIDENTIAL GREEN

"THIS COPYRIGHTED WORK AND THE INFORMATION HEREIN IS PROPRIETARY TO CATERPILLAR INC., SOLAR TURBINES INCORPORATED, AND/OR SUBSIDIARIES OF EITHER. WITHOUT EXPRESS WRITTEN PERMISSION FROM CATERPILLAR INC. OR SOLAR TURBINES INCORPORATED, ANY COPYING, DISCLOSURE, OR USE EXCEPT THAT FOR WHICH IT IS LOANED, IS PROHIBITED."

DATA CONTROL LEVEL	RELEASE STAMP	SIZE	CAGE NO.		
1	PD- J1640	D	66195	Solar Turbines A Caterpillar Company	P.O. BOX 85376 San Diego, California 92186-5376
		MFG DES ENGINEER: A.ABENGOZA	DATE: 11/21/25	DRAWING TITLE: CONSOLE DOOR PANEL	
		DESIGN ENGINEER: D.JOHN	DATE: 11/21/25		

PROJECT NAME: TALOS EW1003 PRINCE

PANEL NO: 0

MODEL: CTLM02 TURBOTRONICS 4

DWG NO. J1640-PH

SHT REV 0.1

LOC: T:\PROJECT\LAYOUT\REV\

DWG REV 0.1

SHEET 2 OF 15

THIS PRINT IS PROVIDED ON A RESTRICTED BASIS AND IS NOT TO BE USED IN ANY WAY DETRIMENTAL TO SOLAR TURBINES INCORPORATED.

REVISION HISTORY

REV	DESCRIPTION	DATE	APPROVED
0	0	0	0
0.1_M.2		04/13/26	A.ABENGOZA

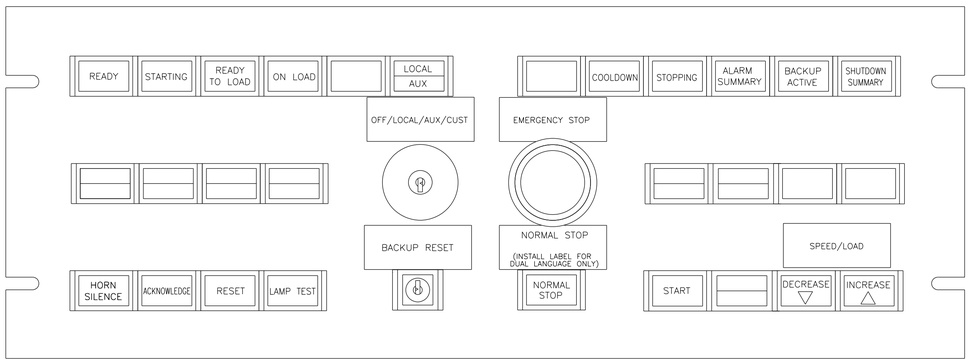

FRONT VIEW

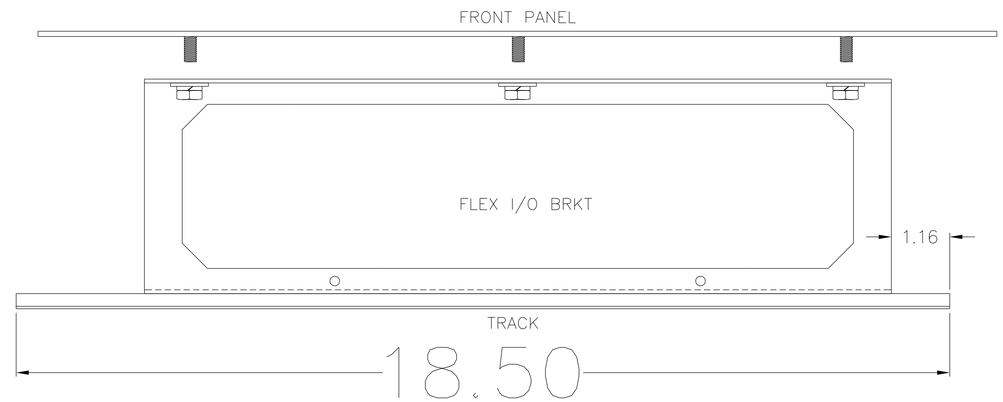

REV 0.1_M.2:
-ADDED XT0201:1-2. Comes pre-installed in TCP
D46368 13-APR-2026

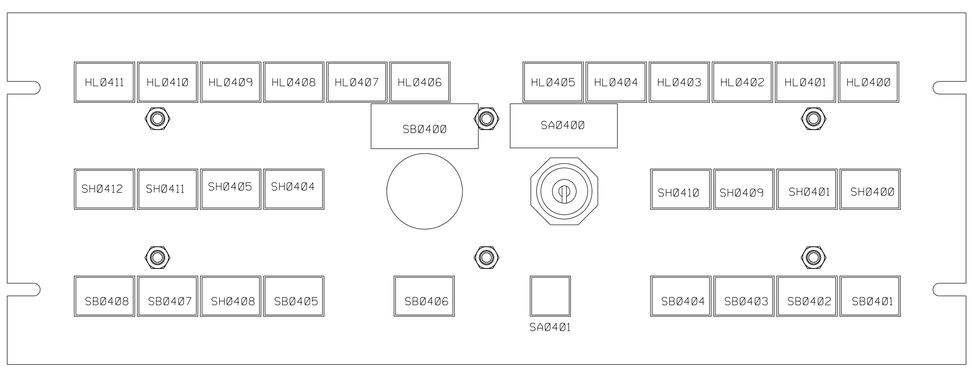

BACK VIEW
WITH FLEX I/O REMOVED

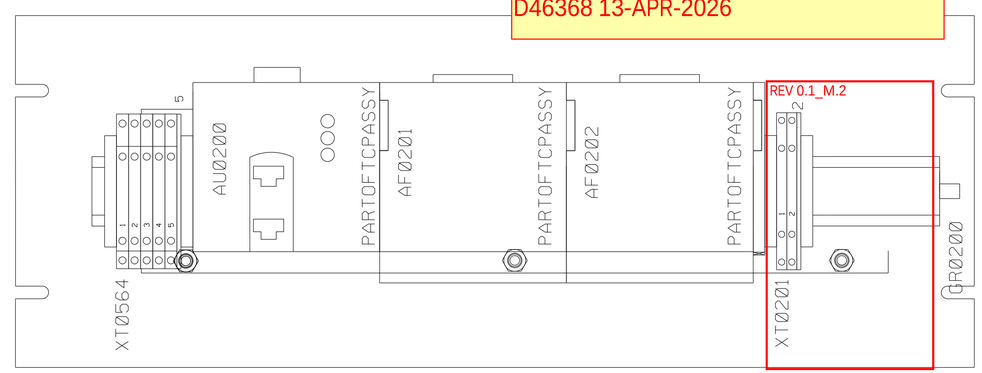

TYP. FOR XT0564

BACK VIEW
WITH FLEX I/O INSTALLED

TCP PN:1507708-602

CATERPILLAR CONFIDENTIAL GREEN
"THIS COPYRIGHTED WORK AND THE INFORMATION HEREIN IS PROPRIETARY TO CATERPILLAR INC., SOLAR TURBINES INCORPORATED, AND/OR SUBSIDIARIES OF EITHER. WITHOUT EXPRESS WRITTEN PERMISSION FROM CATERPILLAR INC. OR SOLAR TURBINES INCORPORATED, ANY COPYING, DISCLOSURE, OR USE EXCEPT THAT FOR WHICH IT IS LOANED, IS PROHIBITED."

DATA CONTROL LEVEL	RELEASE STAMP	SIZE	CAGE NO.		
1	PD- J1640	D	66195	Solar Turbines A Caterpillar Company	P.O. BOX 85376 San Diego, California 92186-5376
		MFG DES ENGINEER: A.ABENGOZA	DATE: 11/21/25	DRAWING TITLE: ASSEMBLY CONTROL PANEL	
		DESIGN ENGINEER: D.JOHN	DATE: 11/21/25		

PROJECT NAME: TALOS EW1003 PRINCE
PANEL NO: Ø
DWG NO. J1640-PH 0.1_M.2
MODEL: CTLM02 TURBOTRONICS 4
LOC: T:\PROJECT\LAYOUT\REV\
DWG REV: 0.1_M.2
SHEET 3 OF 18

THIS PRINT IS PROVIDED ON A RESTRICTED BASIS AND IS NOT TO BE USED IN ANY WAY DETRIMENTAL TO SOLAR TURBINES INCORPORATED.

REVISION HISTORY

REV	DESCRIPTION	DATE	APPROVED
0	0	0	0
0.1_M.2		04/13/26	A.ABENGOZA

MOUNTED ABOVE THE TCP

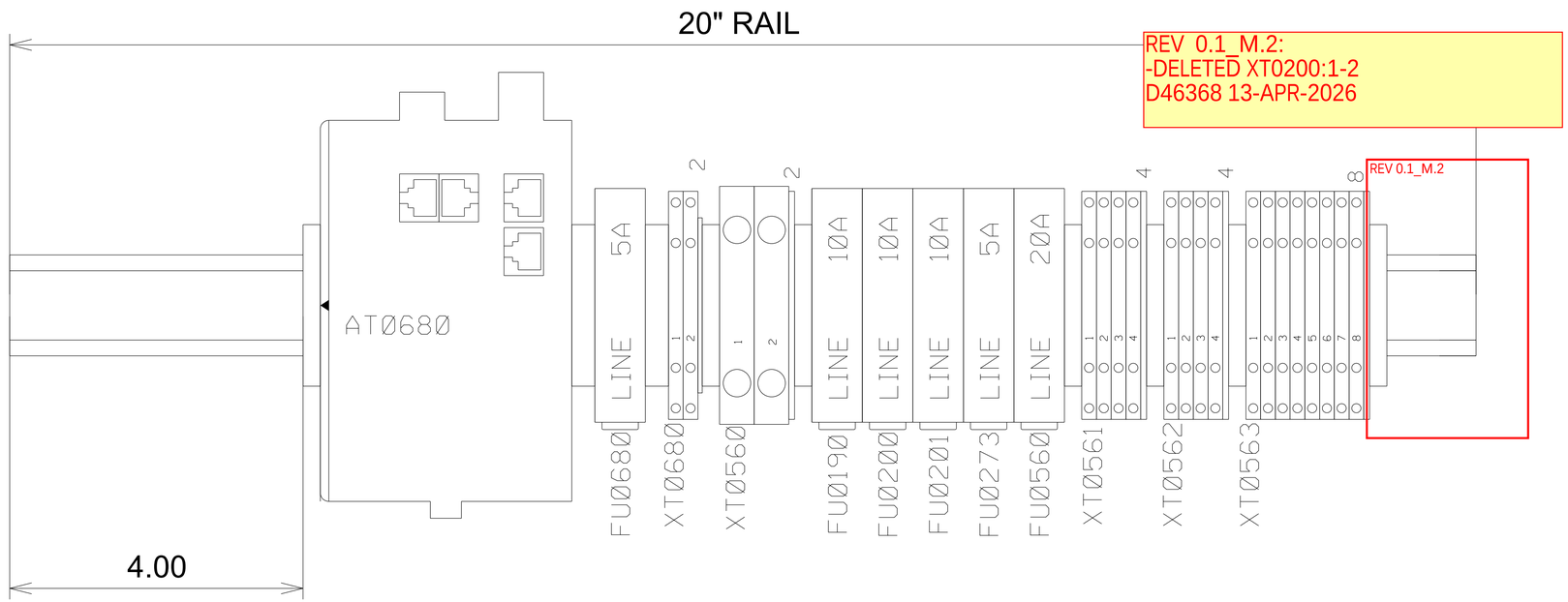

REV 0.1_M.2:
-DELETED XT0200:1-2
D46368 13-APR-2026

CATERPILLAR CONFIDENTIAL GREEN

"THIS COPYRIGHTED WORK AND THE INFORMATION HEREIN IS PROPRIETARY TO CATERPILLAR INC., SOLAR TURBINES INCORPORATED, AND/OR SUBSIDIARIES OF EITHER. WITHOUT EXPRESS WRITTEN PERMISSION FROM CATERPILLAR INC. OR SOLAR TURBINES INCORPORATED, ANY COPYING, DISCLOSURE, OR USE EXCEPT THAT FOR WHICH IT IS LOANED, IS PROHIBITED."

DATA CONTROL LEVEL: 1	RELEASE STAMP: PD-J1640	SIZE: D	CAGE NO.: 66195	Solar Turbines, A Caterpillar Company — P.O. BOX 85376, San Diego, California 92186-5376
		MFG DES ENGINEER: A.ABENGOZA	DATE: 11/21/25	DRAWING TITLE: PWR,DISTRIBUTION RAIL LEFT DOOR
		DESIGN ENGINEER: D.JOHN	DATE: 11/21/25	
PROJECT NAME: TALOS EW1003 PRINCE			PANEL NO: Ø	
MODEL: CTLM02 TURBOTRONICS 4			DWG NO.: J1640-PH	0.1_M.2
LOC: T:\PROJECT\LAYOUT\REV\			DWG REV: 0.1_M.2	SHEET 4 OF 18

THIS PRINT IS PROVIDED ON A RESTRICTED BASIS AND IS NOT TO BE USED IN ANY WAY DETRIMENTAL TO SOLAR TURBINES INCORPORATED.

REVISION HISTORY

REV	DESCRIPTION	DATE	APPROVED
0	0	0	0
0.1		03/22/26	A.ABENGOZA

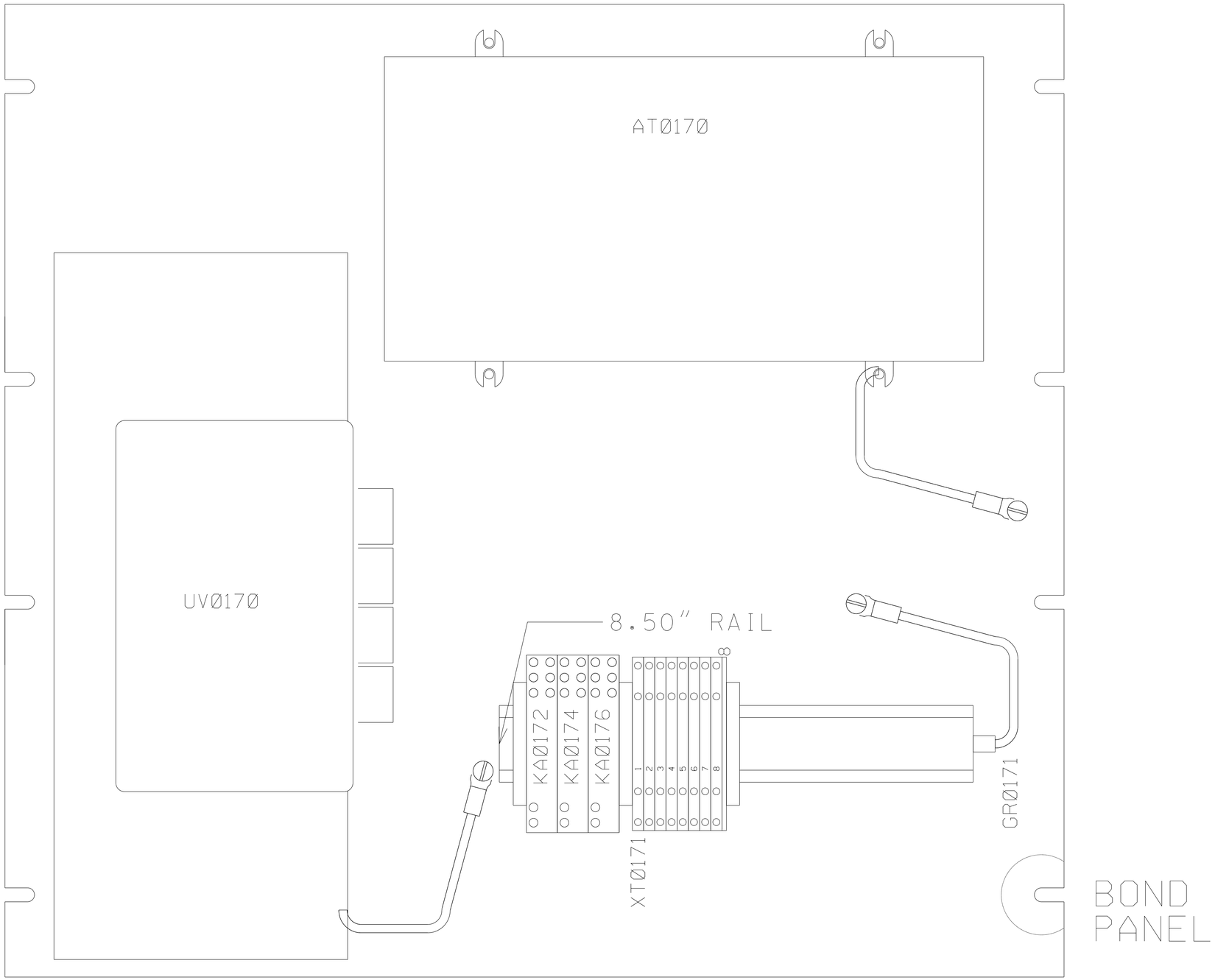

SPRING PANEL: 1058134-4

CATERPILLAR CONFIDENTIAL GREEN

"THIS COPYRIGHTED WORK AND THE INFORMATION HEREIN IS PROPRIETARY TO CATERPILLAR INC., SOLAR TURBINES INCORPORATED, AND/OR SUBSIDIARIES OF EITHER. WITHOUT EXPRESS WRITTEN PERMISSION FROM CATERPILLAR INC. OR SOLAR TURBINES INCORPORATED, ANY COPYING, DISCLOSURE, OR USE EXCEPT THAT FOR WHICH IT IS LOANED, IS PROHIBITED."

DATA CONTROL LEVEL	RELEASE STAMP	SIZE	CAGE NO.		
1	PD-J1640	D	66195	Solar Turbines A Caterpillar Company	P.O. BOX 85376 San Diego, California 92186-5376
		MFG DES ENGINEER: A.ABENGOZA	DATE: 11/21/25	DRAWING TITLE: FIRE SYSTEM CONTROLLER PANEL	
		DESIGN ENGINEER: D.JOHN	DATE: 11/21/25		

PROJECT NAME	TALOS EW1003 PRINCE	PANEL NO. 0	
MODEL	CTLM02 TURBOTRONICS 4	DWG NO. J1640-PH	SHT REV 0.1
LOC	T:\PROJECT\LAYOUT\REV\	DWG REV 0.1	SHEET 5 OF 15

THIS PRINT IS PROVIDED ON A RESTRICTED BASIS AND IS NOT TO BE USED IN ANY WAY DETRIMENTAL TO SOLAR TURBINES INCORPORATED.

REVISION HISTORY

REV	DESCRIPTION	DATE	APPROVED
0	0	0	0
0.1		03/22/26	A.ABENGOZA

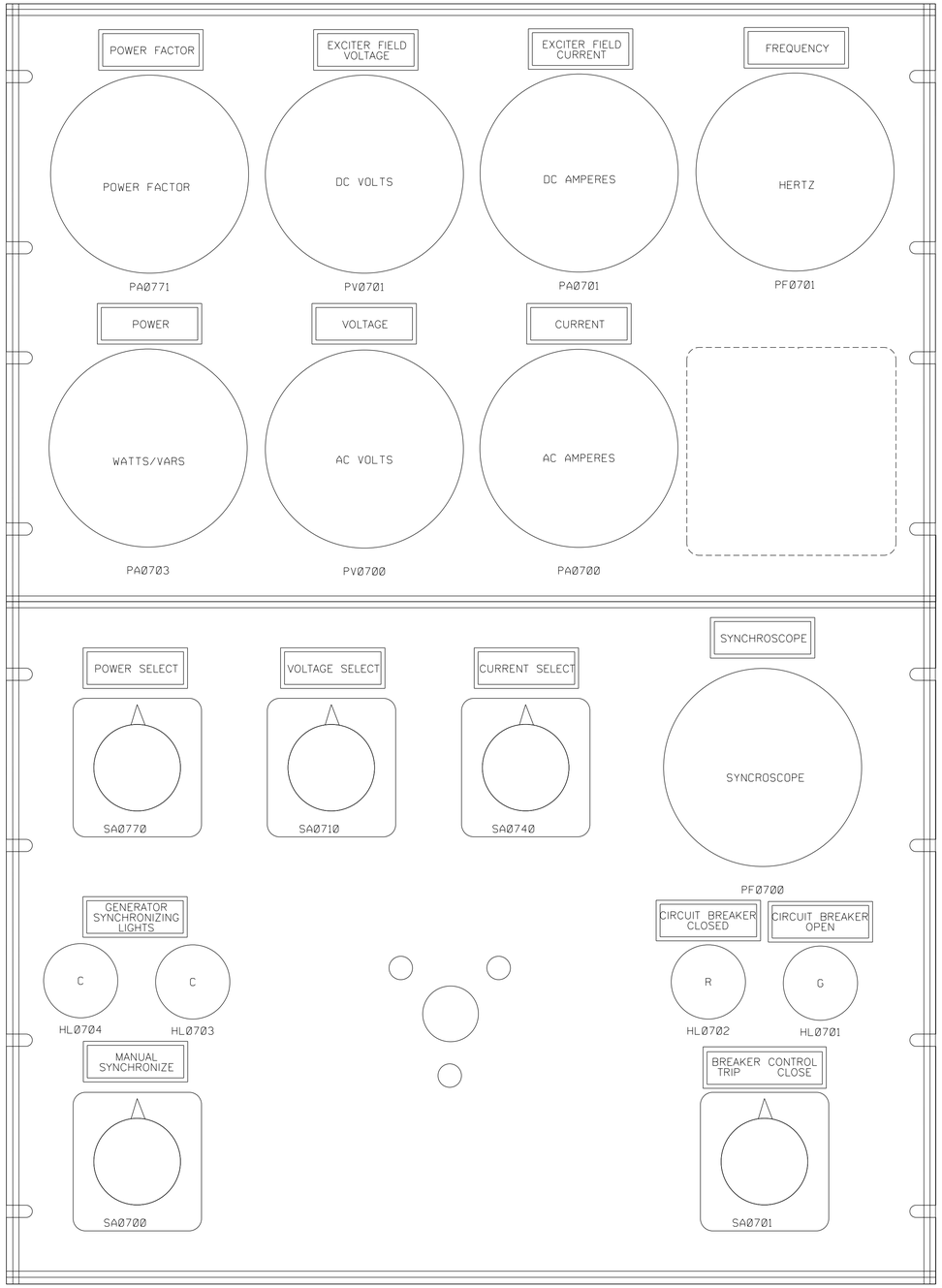

REAR VIEW

FLEXI GLASS COVER AND 4 PCS STANDOFF FOR METERS
SPN: 1058121-100 & -90

PANEL: 1020036-1

FLEXI GLASS COVER AND 4 PCS STANDOFF FOR SWITCHES
SPN: 1058121-110 & -90

PANEL: 1056616-2

CATERPILLAR CONFIDENTIAL GREEN

"THIS COPYRIGHTED WORK AND THE INFORMATION HEREIN IS PROPRIETARY TO CATERPILLAR INC., SOLAR TURBINES INCORPORATED, AND/OR SUBSIDIARIES OF EITHER. WITHOUT EXPRESS WRITTEN PERMISSION FROM CATERPILLAR INC. OR SOLAR TURBINES INCORPORATED, ANY COPYING, DISCLOSURE, OR USE EXCEPT THAT FOR WHICH IT IS LOANED, IS PROHIBITED."

DATA CONTROL LEVEL: 1	RELEASE STAMP: PD-J1640	SIZE: D	CAGE NO.: 66195	Solar Turbines, A Caterpillar Company	P.O. BOX 85376 San Diego, California 92186-5376
		MFG DES ENGINEER: A.ABENGOZA	DATE: 11/21/25	DRAWING TITLE: METER AND SWITCH PANELS	
		DESIGN ENGINEER: D.JOHN	DATE: 11/21/25		
PROJECT NAME: TALOS EW1003 PRINCE				PANEL NO. Ø	
MODEL: CTLM02 TURBOTRONICS 4				DWG NO. J1640-PH	SHT REV 0.1
LOC: T:\PROJECT\LAYOUT\REV\				DWG REV Ø.1	SHEET 6 OF 15

THIS PRINT IS PROVIDED ON A RESTRICTED BASIS AND IS NOT TO BE USED IN ANY WAY DETRIMENTAL TO SOLAR TURBINES INCORPORATED.

REVISION HISTORY

REV	DESCRIPTION	DATE	APPROVED
0	0	0	0
0.1		Ø3/22/26	A.ABENGOZA

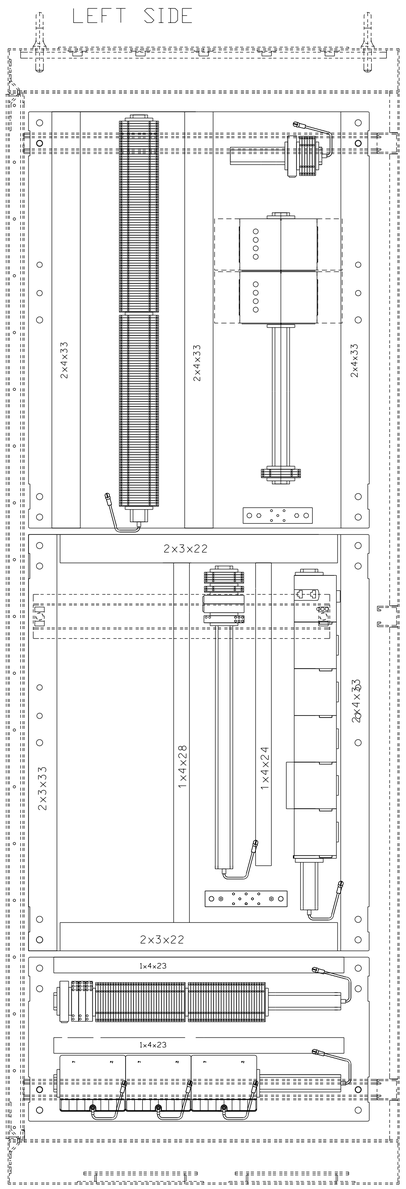

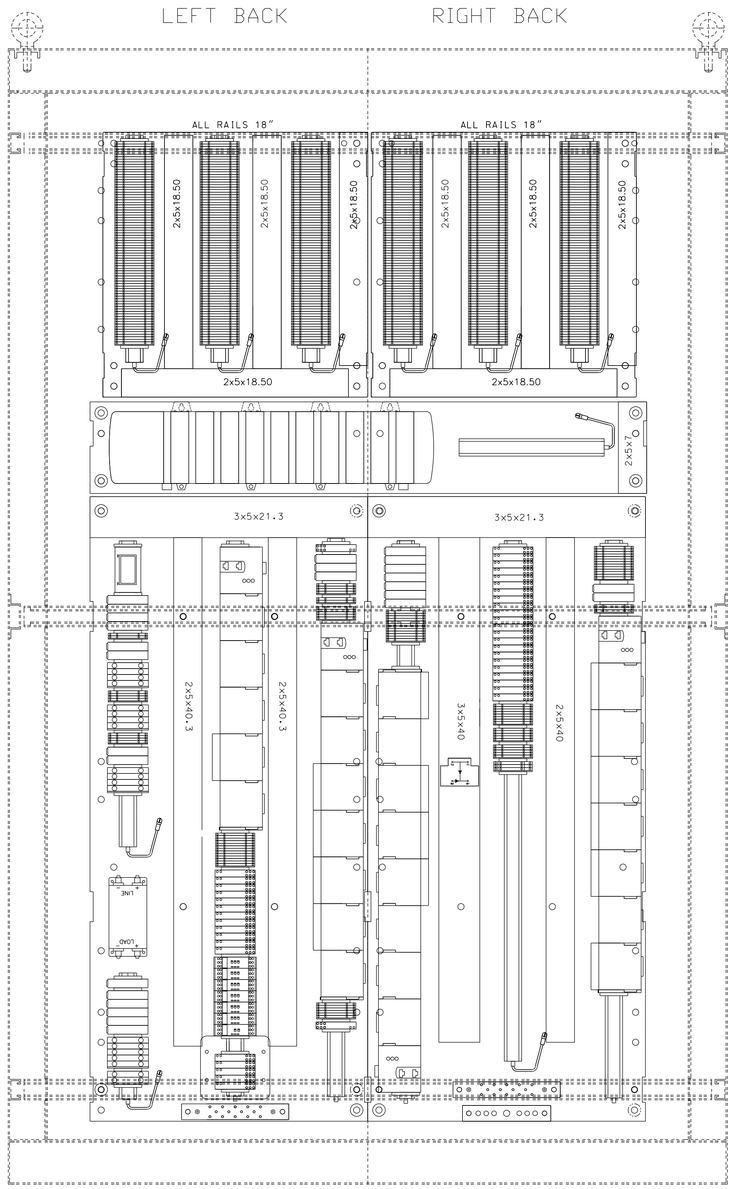

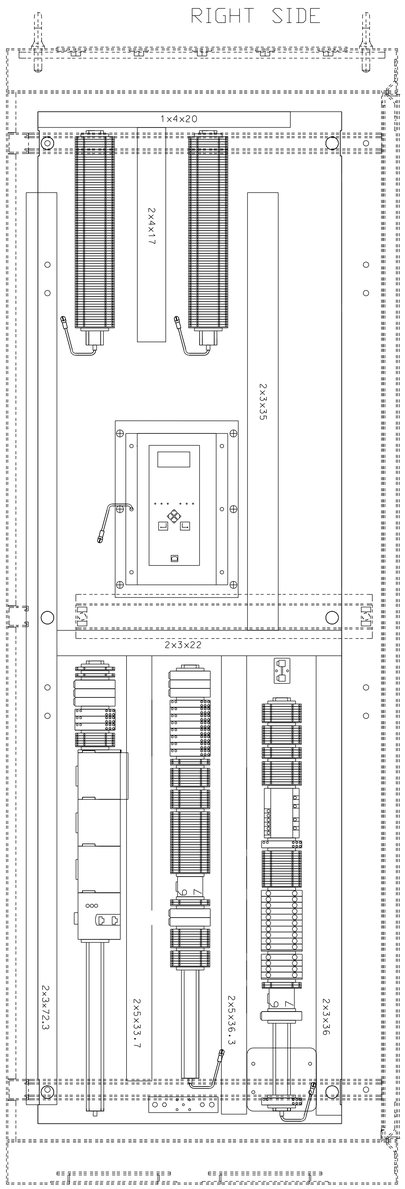

CATERPILLAR CONFIDENTIAL GREEN

"THIS COPYRIGHTED WORK AND THE INFORMATION HEREIN IS PROPRIETARY TO CATERPILLAR INC., SOLAR TURBINES INCORPORATED, AND/OR SUBSIDIARIES OF EITHER. WITHOUT EXPRESS WRITTEN PERMISSION FROM CATERPILLAR INC. OR SOLAR TURBINES INCORPORATED, ANY COPYING, DISCLOSURE, OR USE EXCEPT THAT FOR WHICH IT IS LOANED, IS PROHIBITED."

DATA CONTROL LEVEL	RELEASE STAMP	SIZE	CAGE NO.		
1	PD- J1640	D	66195	Solar Turbines A Caterpillar Company	P.O. BOX 85376 San Diego, California 92186-5376
		MFG DES ENGINEER: A.ABENGOZA	DATE: 11/21/25	DRAWING TITLE: CONSOLE PANELS	
		DESIGN ENGINEER: D.JOHN	DATE: 11/21/25		

PROJECT NAME: TALOS EW1003 PRINCE		PANEL NO: Ø	
MODEL: CTLM02 TURBOTRONICS 4		DWG NO. J1640-PH	SHT REV 0.1
LOC: T:\PROJECT\LAYOUT\REV\		DWG REV 0.1	SHEET 7 OF 15

THIS PRINT IS PROVIDED ON A RESTRICTED BASIS AND IS NOT TO BE USED IN ANY WAY DETRIMENTAL TO SOLAR TURBINES INCORPORATED.

REVISION HISTORY

REV	DESCRIPTION	DATE	APPROVED
0	0	0	0
0.1		03/22/26	A.ABENGOZA

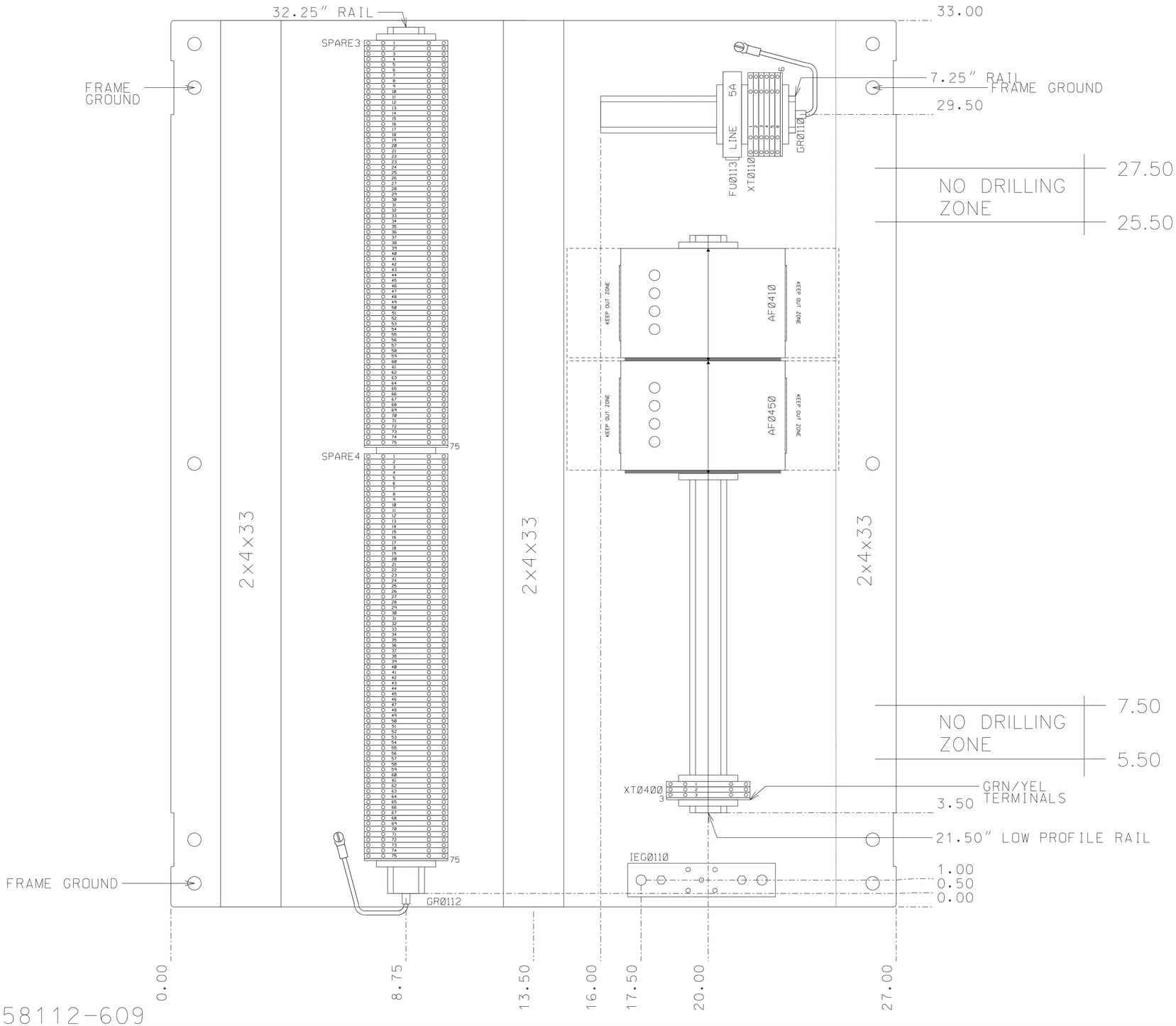

SPRING CONSOLE PANEL:1058112-609

CATERPILLAR CONFIDENTIAL GREEN

"THIS COPYRIGHTED WORK AND THE INFORMATION HEREIN IS PROPRIETARY TO CATERPILLAR INC., SOLAR TURBINES INCORPORATED, AND/OR SUBSIDIARIES OF EITHER, WITHOUT EXPRESS WRITTEN PERMISSION FROM CATERPILLAR INC. OR SOLAR TURBINES INCORPORATED, ANY COPYING, DISCLOSURE, OR USE EXCEPT THAT FOR WHICH IT IS LOANED, IS PROHIBITED."

DATA CONTROL LEVEL	RELEASE STAMP	SIZE	CAGE NO.	Solar Turbines A Caterpillar Company	P.O. BOX 85376 San Diego, California 92186-5376
1	PD- J1640	D	66195		
		MFG DES ENGINEER: A.ABENGOZA	DATE: 11/21/25	DRAWING TITLE: TURB VIB PANEL	
		DESIGN ENGINEER: D.JOHN	DATE: 11/21/25		
PROJECT NAME: TALOS EW1003 PRINCE				PANEL NO: 0	
MODEL: CTLM02 TURBOTRONICS 4				DWG NO. J1640-PH	SHT REV 0.1
LOC: T:\PROJECT\LAYOUT\REV\				DWG REV 0.1	SHEET 8 OF 15

THIS PRINT IS PROVIDED ON A RESTRICTED BASIS AND IS NOT TO BE USED IN ANY WAY DETRIMENTAL TO SOLAR TURBINES INCORPORATED.

REVISION HISTORY

REV	DESCRIPTION	DATE	APPROVED
0	0	0	0
0.1		03/22/26	A.ABENGOZA

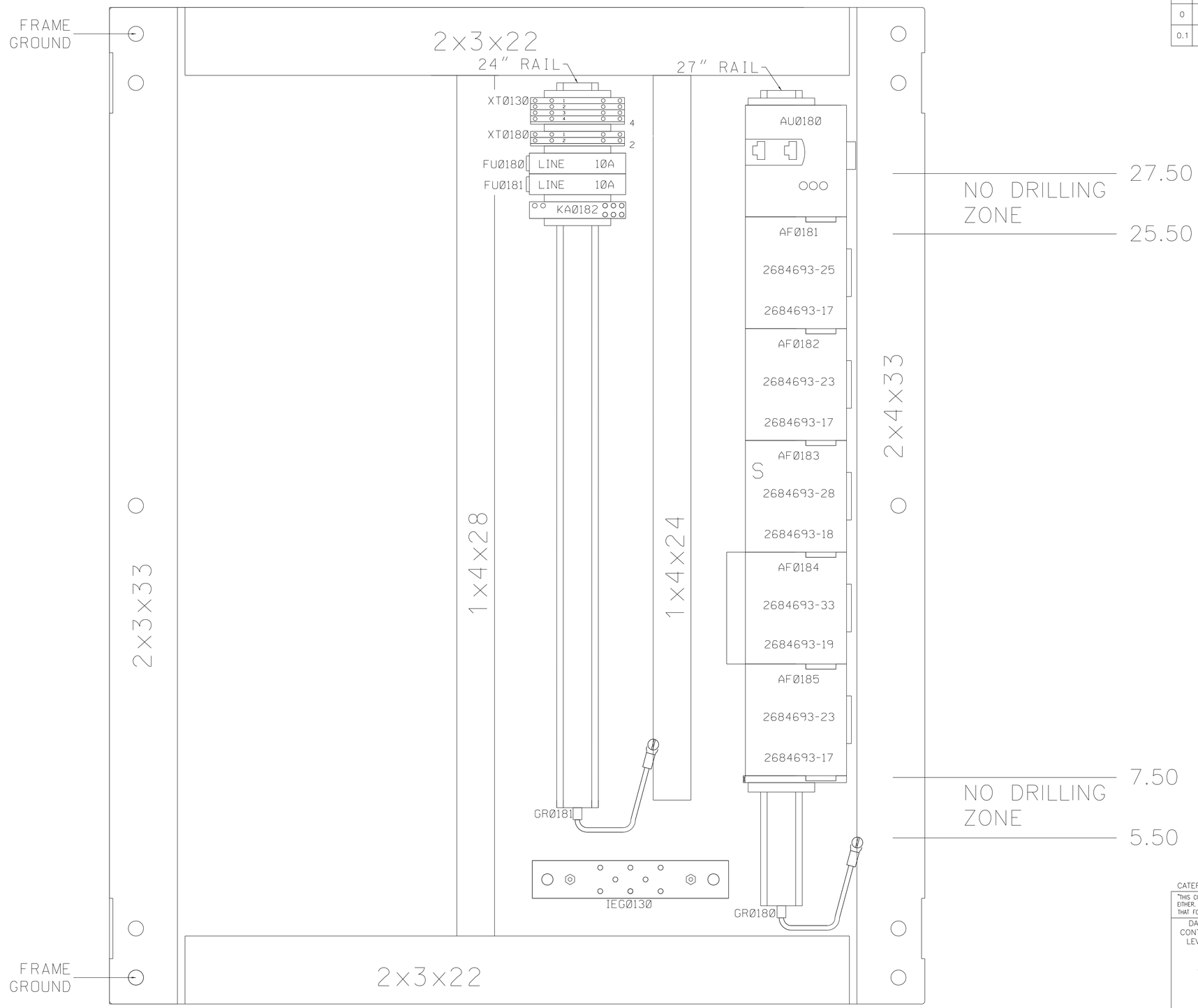

SPRING PANEL:1058112-803

CATERPILLAR CONFIDENTIAL GREEN

"THIS COPYRIGHTED WORK AND THE INFORMATION HEREIN IS PROPRIETARY TO CATERPILLAR INC., SOLAR TURBINES INCORPORATED, AND/OR SUBSIDIARIES OF EITHER WITHOUT EXPRESS WRITTEN PERMISSION FROM CATERPILLAR INC. OR SOLAR TURBINES INCORPORATED, ANY COPYING, DISCLOSURE, OR USE EXCEPT THAT FOR WHICH IT IS LOANED, IS PROHIBITED."

DATA CONTROL LEVEL	RELEASE STAMP	SIZE	CAGE NO.	Solar Turbines A Caterpillar Company	P.O. BOX 85376 San Diego, California 92186-5376
1	PD- J1640	D	66195		
		MFG DES ENGINEER: A.ABENGOZA	DATE: 11/21/25	DRAWING TITLE: GENERATOR VIB PANEL	
		DESIGN ENGINEER: D.JOHN	DATE: 11/21/25		

PROJECT NAME	TALOS EW1003 PRINCE	PANEL NO	0
MODEL	CTLM02 TURBOTRONICS 4	DWG NO.	J1640-PH
LOC	T:\PROJECT\LAYOUT\REV\	DWG REV 0.1	SHT REV 0.1
		SHEET 9 OF 15	

THIS PRINT IS PROVIDED ON A RESTRICTED BASIS AND IS NOT TO BE USED IN ANY WAY DETRIMENTAL TO SOLAR TURBINES INCORPORATED.

REVISION HISTORY

REV	DESCRIPTION	DATE	APPROVED
0	0	0	0
0.1		03/22/26	A.ABENGOZA

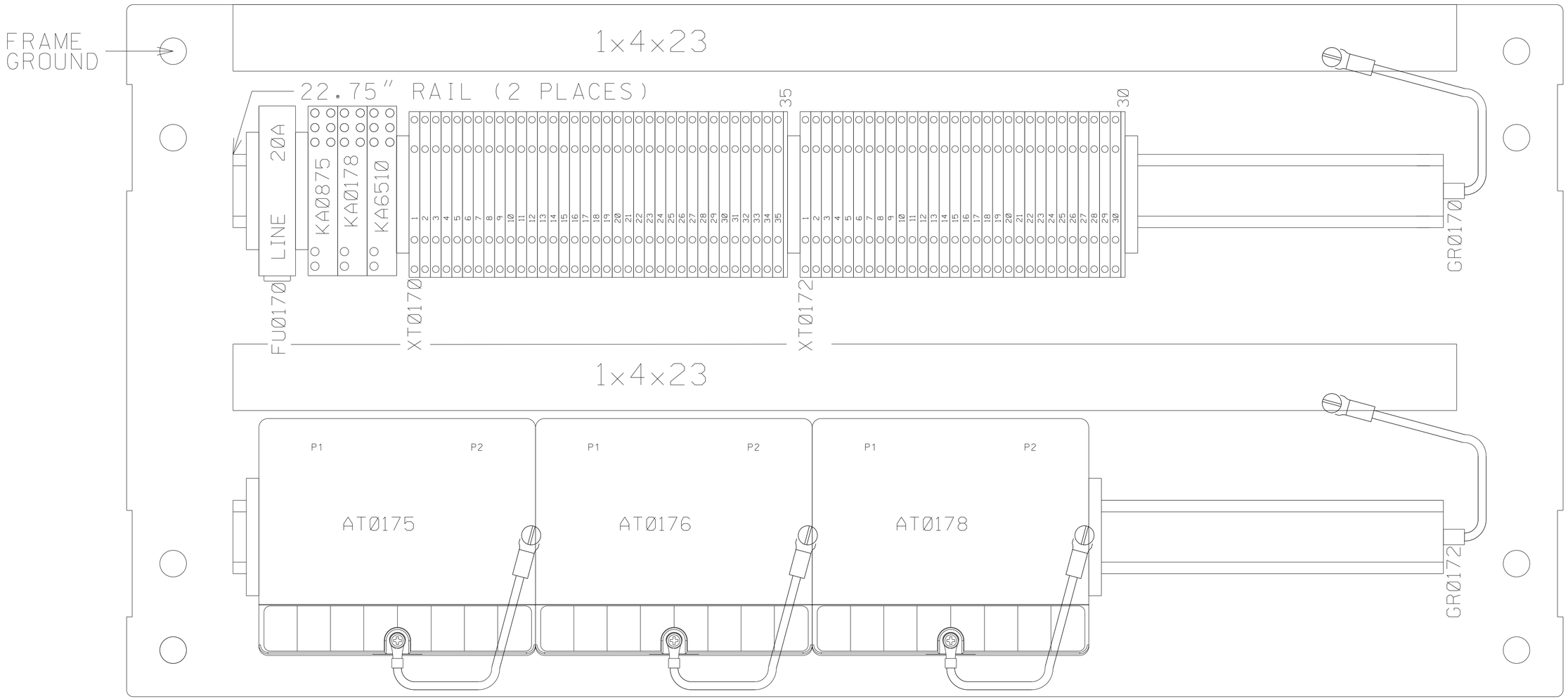

SPRING PANEL:1058112-1401

CATERPILLAR CONFIDENTIAL GREEN

"THIS COPYRIGHTED WORK AND THE INFORMATION HEREIN IS PROPRIETARY TO CATERPILLAR INC., SOLAR TURBINES INCORPORATED, AND/OR SUBSIDIARIES OF EITHER. WITHOUT EXPRESS WRITTEN PERMISSION FROM CATERPILLAR INC. OR SOLAR TURBINES INCORPORATED, ANY COPYING, DISCLOSURE, OR USE EXCEPT THAT FOR WHICH IT IS LOANED, IS PROHIBITED."

DATA CONTROL LEVEL	RELEASE STAMP	SIZE	CAGE NO.		
1	PD- J1640	D	66195	Solar Turbines A Caterpillar Company	P.O. BOX 85376 San Diego, California 92186-5376
		MFG DES ENGINEER: A.ABENGOZA	DATE: 11/21/25	DRAWING TITLE: FIRE SYSTEM PANEL	
		DESIGN ENGINEER: D.JOHN	DATE: 11/21/25		

PROJECT NAME: TALOS EW1003 PRINCE

PANEL NO: 0

MODEL: CTLM02 TURBOTRONICS 4

DWG NO. J1640-PH

SHT REV 0.1

LOC: T:\PROJECT\LAYOUT\REV\

DWG REV 0.1

SHEET 10 OF 15

THIS PRINT IS PROVIDED ON A RESTRICTED BASIS AND IS NOT TO BE USED IN ANY WAY DETRIMENTAL TO SOLAR TURBINES INCORPORATED.

REVISION HISTORY

REV	DESCRIPTION	DATE	APPROVED
620	T:\149332\Rev270\1057027-270.dwg	5/3/2010	M. Nguyen
0.1		03/22/26	A.ABENGOZA

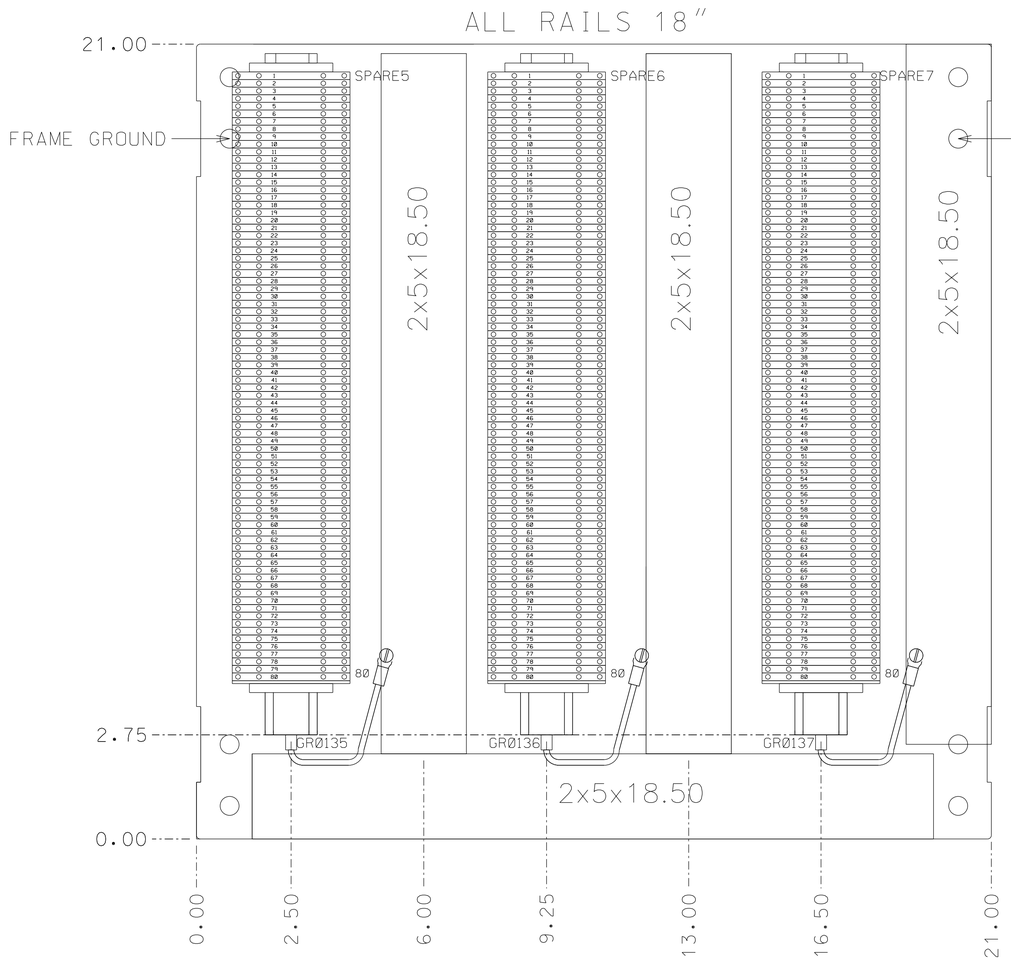

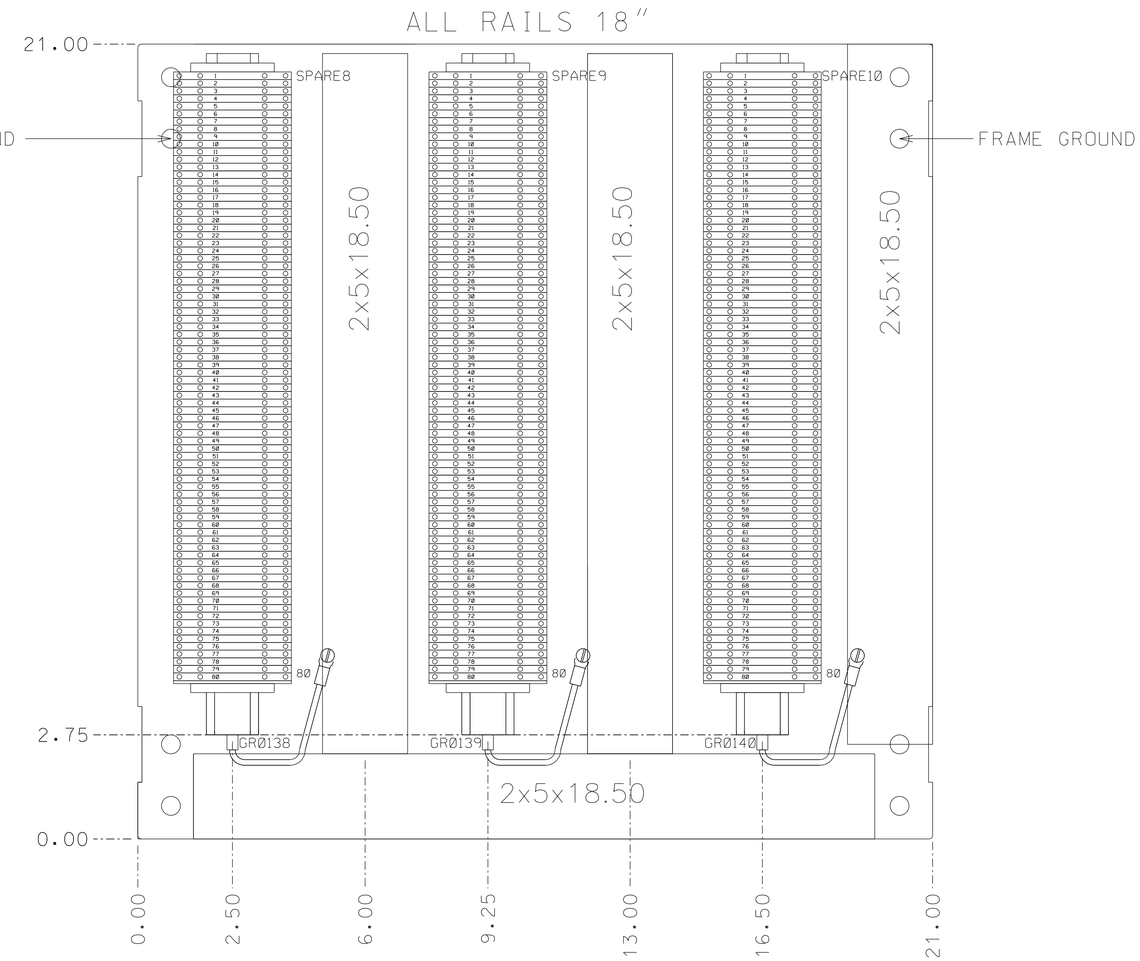

SPRING
PANEL #1053331-302

CATERPILLAR CONFIDENTIAL GREEN

"THIS COPYRIGHTED WORK AND THE INFORMATION HEREIN IS PROPRIETARY TO CATERPILLAR INC., SOLAR TURBINES INCORPORATED, AND/OR SUBSIDIARIES OF EITHER. WITHOUT EXPRESS WRITTEN PERMISSION FROM CATERPILLAR INC. OR SOLAR TURBINES INCORPORATED, ANY COPYING, DISCLOSURE, OR USE EXCEPT THAT FOR WHICH IT IS LOANED, IS PROHIBITED."

DATA CONTROL LEVEL	RELEASE STAMP	SIZE	CAGE NO.		
1	PD-J1640	D	66195	Solar Turbines A Caterpillar Company	P.O. BOX 85376 San Diego, California 92186-5376
		MFG DES ENGINEER: A.ABENGOZA	DATE: 11/21/25	DRAWING TITLE: SPARE MARSHALLING PANELS	
		DESIGN ENGINEER: D.JOHN	DATE: 11/21/25		

PROJECT NAME: TALOS EW1003 PRINCE
PANEL NO. 1057027
MODEL: CTLM02 TURBOTRONICS 4
DWG NO. J1640-149448
SHT REV 0.1
LOC: T:\PROJECT\LAYOUT\REV\
DWG REV 0.1
SHEET 11 OF 15

THIS PRINT IS PROVIDED ON A RESTRICTED BASIS AND IS NOT TO BE USED IN ANY WAY DETRIMENTAL TO SOLAR TURBINES INCORPORATED.

REVISION HISTORY

REV	DESCRIPTION	DATE	APPROVED
0	0	0	0
0.1		03/22/26	A.ABENGOZA

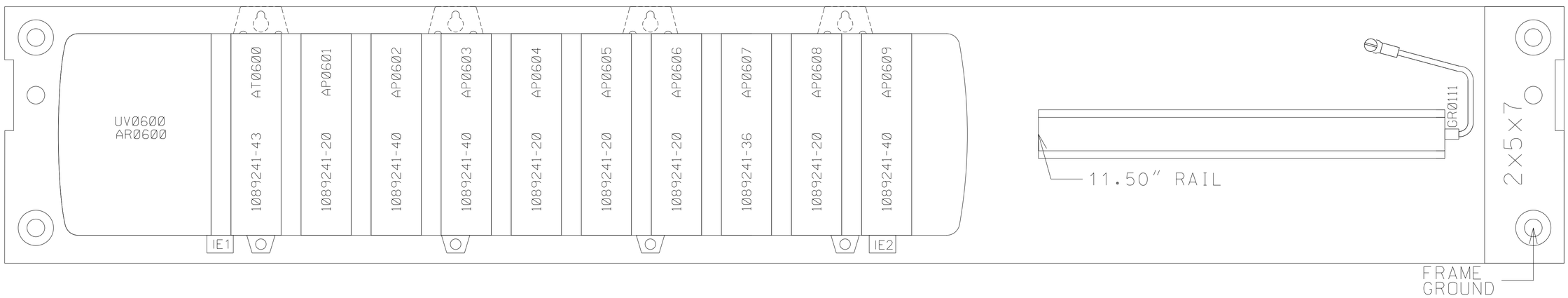

SPRING
PANEL:1058112-2001

CATERPILLAR CONFIDENTIAL GREEN

"THIS COPYRIGHTED WORK AND THE INFORMATION HEREIN IS PROPRIETARY TO CATERPILLAR INC., SOLAR TURBINES INCORPORATED, AND/OR SUBSIDIARIES OF EITHER. WITHOUT EXPRESS WRITTEN PERMISSION FROM CATERPILLAR INC. OR SOLAR TURBINES INCORPORATED, ANY COPYING, DISCLOSURE, OR USE EXCEPT THAT FOR WHICH IT IS LOANED, IS PROHIBITED."

DATA CONTROL LEVEL	RELEASE STAMP	SIZE	CAGE NO.		
1	PD-J1640	D	66195	Solar Turbines A Caterpillar Company	P.O. BOX 85376 San Diego, California 92186-5376
		MFG DES ENGINEER: A.ABENGOZA	DATE: 11/21/25	DRAWING TITLE: PLC PANEL	
		DESIGN ENGINEER: D.JOHN	DATE: 11/21/25		

PROJECT NAME: TALOS EW1003 PRINCE

PANEL NO: 0

MODEL: CTLM02 TURBOTRONICS 4

DWG NO. J1640-PH

SHT REV 0.1

LOC: T:\PROJECT\LAYOUT\REV\

DWG REV 0.1

SHEET 12 OF 15

THIS PRINT IS PROVIDED ON A RESTRICTED BASIS AND IS NOT TO BE USED IN ANY WAY DETRIMENTAL TO SOLAR TURBINES INCORPORATED.

REVISION HISTORY

REV	DESCRIPTION	DATE	APPROVED
0	0	0	0
0.1_M.1		04/06/26	A.ABENGOZA

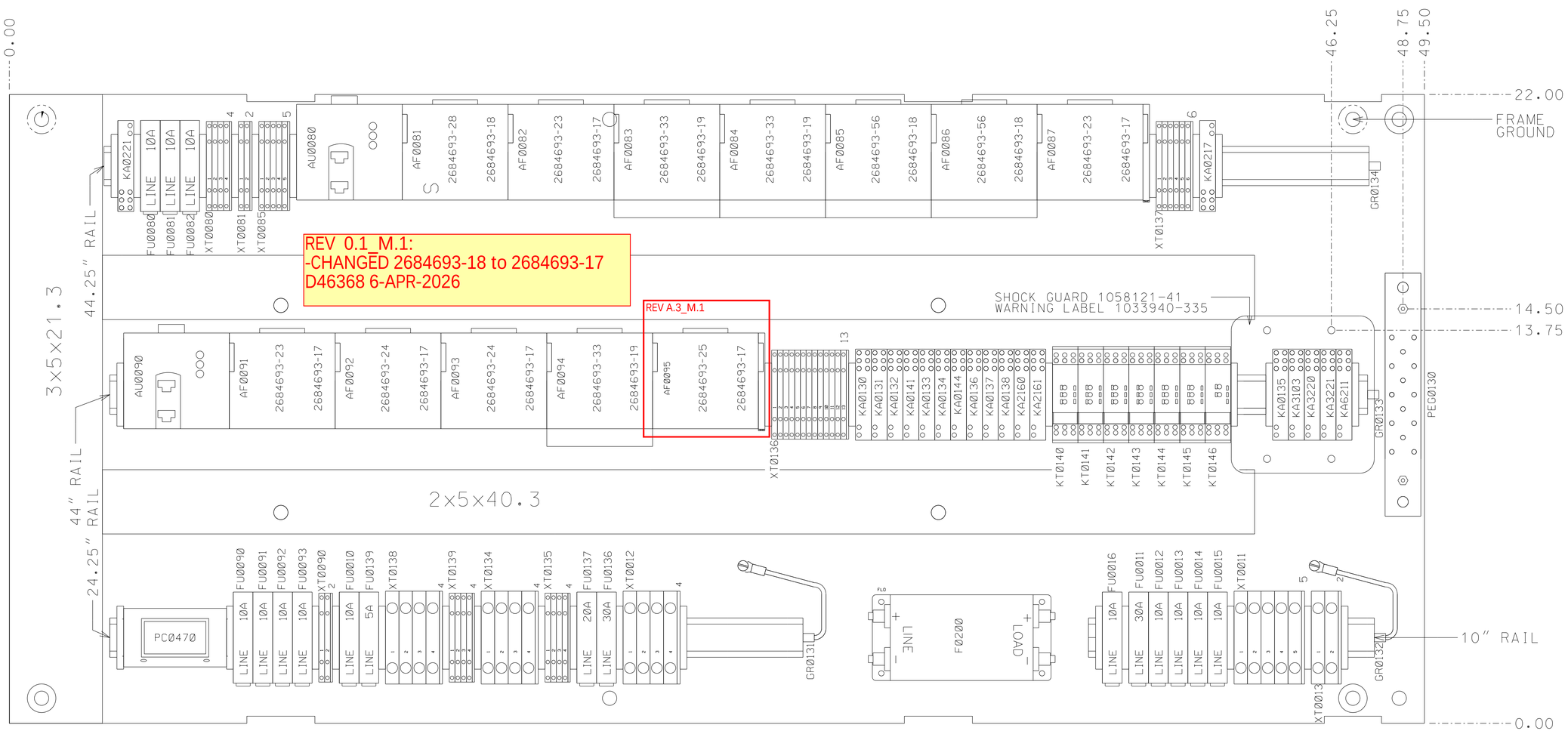

SPRING
CONSOLE
PANEL:1058112-2102

CATERPILLAR CONFIDENTIAL GREEN

"THIS COPYRIGHTED WORK AND THE INFORMATION HEREIN IS PROPRIETARY TO CATERPILLAR INC., SOLAR TURBINES INCORPORATED, AND/OR SUBSIDIARIES OF EITHER. WITHOUT EXPRESS WRITTEN PERMISSION FROM CATERPILLAR INC. OR SOLAR TURBINES INCORPORATED, ANY COPYING, DISCLOSURE, OR USE EXCEPT THAT FOR WHICH IT IS LOANED, IS PROHIBITED."

DATA CONTROL LEVEL	RELEASE STAMP	SIZE	CAGE NO.		
1	PD-J1640	D	66195	Solar Turbines A Caterpillar Company	P.O. BOX 85376 San Diego, California 92186-5376
		MFG DES ENGINEER: A.ABENGOZA	DATE: 11/21/25	DRAWING TITLE: TURBINE PANEL A	
		DESIGN ENGINEER: D.JOHN	DATE: 11/21/25		

PROJECT NAME: TALOS EW1003 PRINCE
PANEL NO: Ø
MODEL: CTLM02 TURBOTRONICS 4
DWG NO. J1640-PH 0.1_M.1
LOC: T:\PROJECT\LAYOUT\REV\
DWG REV 0.1_M.1
SHEET 13 OF 16

THIS PRINT IS PROVIDED ON A RESTRICTED BASIS AND IS NOT TO BE USED IN ANY WAY DETRIMENTAL TO SOLAR TURBINES INCORPORATED.

REVISION HISTORY

REV	DESCRIPTION	DATE	APPROVED
0	0	0	0
0.1		03/22/26	A.ABENGOZA

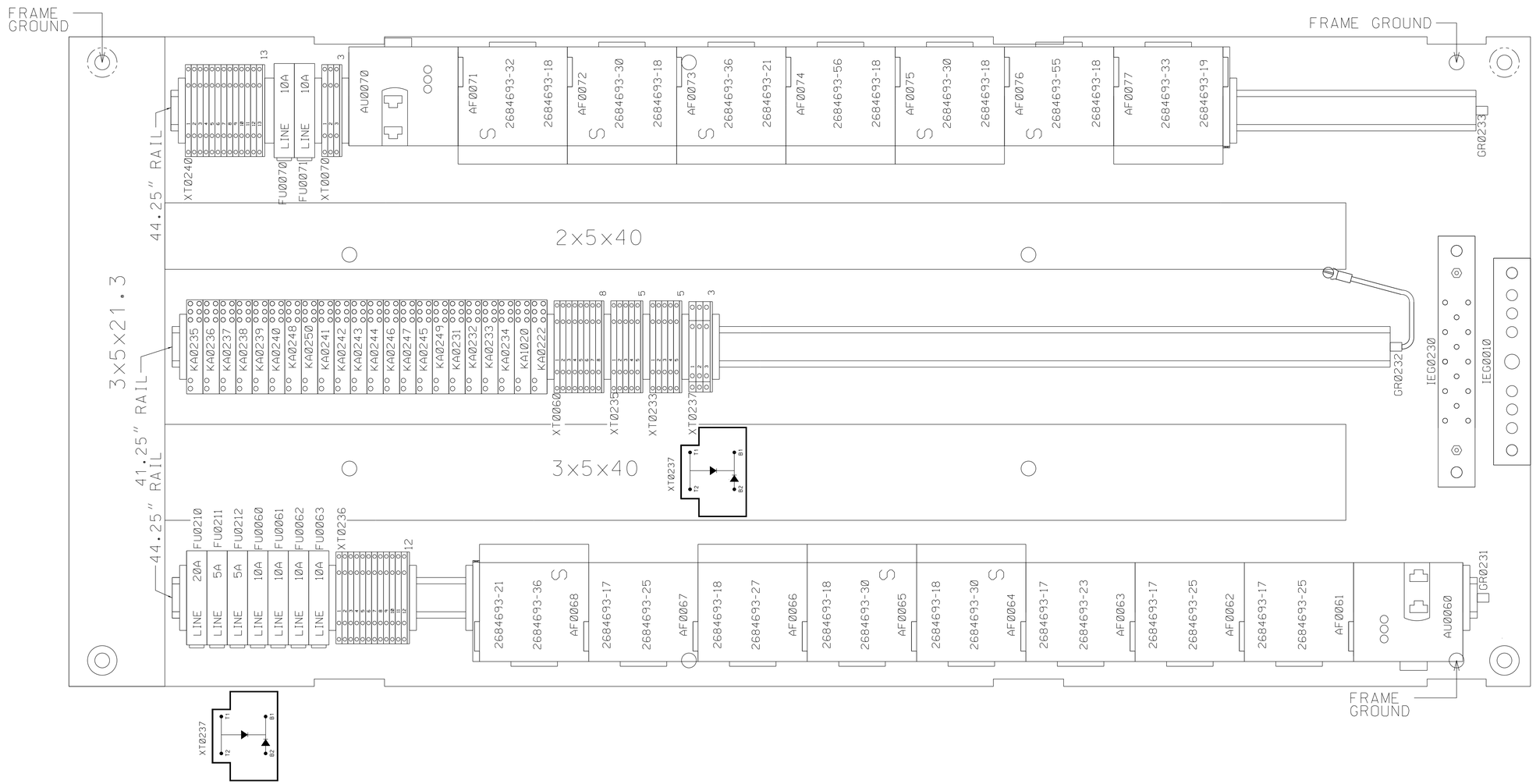

SPRING
CONSOLE
PANEL:1058112-2102

CATERPILLAR CONFIDENTIAL GREEN

"THIS COPYRIGHTED WORK AND THE INFORMATION HEREIN IS PROPRIETARY TO CATERPILLAR INC., SOLAR TURBINES INCORPORATED, AND/OR SUBSIDIARIES OF EITHER. WITHOUT EXPRESS WRITTEN PERMISSION FROM CATERPILLAR INC. OR SOLAR TURBINES INCORPORATED, ANY COPYING, DISCLOSURE, OR USE EXCEPT THAT FOR WHICH IT IS LOANED, IS PROHIBITED."

DATA CONTROL LEVEL	RELEASE STAMP	SIZE	CAGE NO.		
1	PD-J1640	D	66195	Solar Turbines A Caterpillar Company	P.O. BOX 85376 San Diego, California 92186-5376
		MFG DES ENGINEER A.ABENGOZA	DATE 11/21/25	DRAWING TITLE TURBINE PANEL B	
		DESIGN ENGINEER D.JOHN	DATE 11/21/25		

PROJECT NAME	TALOS EW1003 PRINCE	PANEL NO. 0	
MODEL CTLM02 TURBOTRONICS 4		DWG NO. J1640-PH	SHT REV 0.1
LOC T:\PROJECT\LAYOUT\REV\		DWG REV 0.1	SHEET 14 OF 15

THIS PRINT IS PROVIDED ON A RESTRICTED BASIS AND IS NOT TO BE USED IN ANY WAY DETRIMENTAL TO SOLAR TURBINES INCORPORATED.

REVISION HISTORY

REV	DESCRIPTION	DATE	APPROVED
0	0	0	0
0.1		03/22/26	A.ABENGOZA

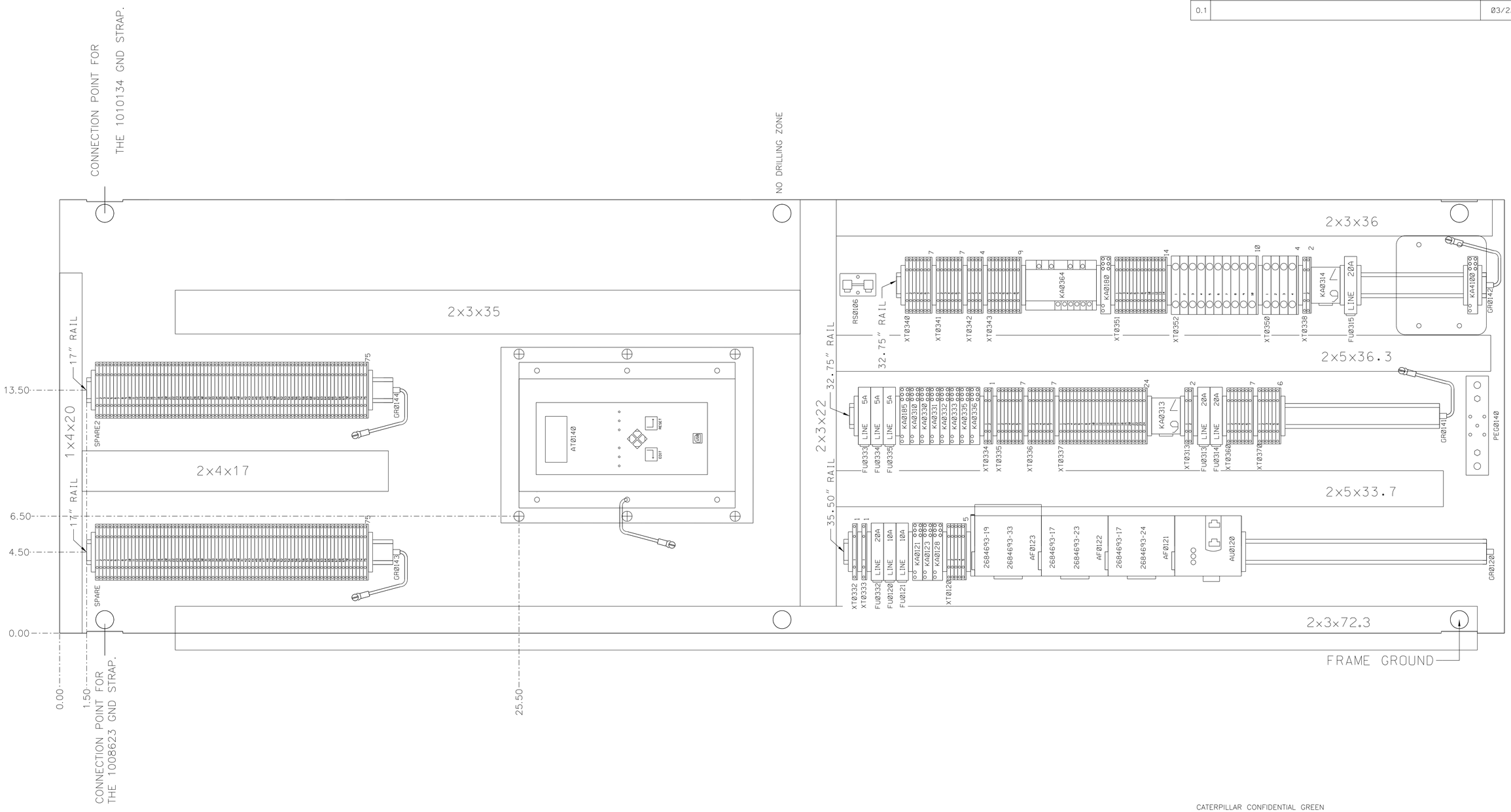

CATERPILLAR CONFIDENTIAL GREEN

"THIS COPYRIGHTED WORK AND THE INFORMATION HEREIN IS PROPRIETARY TO CATERPILLAR INC., SOLAR TURBINES INCORPORATED, AND/OR SUBSIDIARIES OF EITHER. WITHOUT EXPRESS WRITTEN PERMISSION FROM CATERPILLAR INC. OR SOLAR TURBINES INCORPORATED, ANY COPYING, DISCLOSURE, OR USE EXCEPT THAT FOR WHICH IT IS LOANED, IS PROHIBITED."

DATA CONTROL LEVEL	RELEASE STAMP	SIZE	CAGE NO.		
1	PD-J1640	D	66195	Solar Turbines A Caterpillar Company	P.O. BOX 85376 San Diego, California 92186-5376
		MFG DES ENGINEER: A.ABENGOZA	DATE: 11/21/25	DRAWING TITLE: GENERATOR DECS250 PANEL	
		DESIGN ENGINEER: D.JOHN	DATE: 11/21/25		

PROJECT NAME	TALOS EW1003 PRINCE	PANEL NO	Ø
MODEL	CTLM02 TURBOTRONICS 4	DWG NO. J1640-PH	SHT REV 0.1
LOC	T:\PROJECT\LAYOUT\REV\	DWG REV Ø.1	SHEET 15 OF 15

SPRING
PANEL: 1058112-405

THIS PRINT IS PROVIDED ON A RESTRICTED BASIS AND IS NOT TO BE USED IN ANY WAY DETRIMENTAL TO SOLAR TURBINES INCORPORATED.

REVISION HISTORY

REV	DESCRIPTION	DATE	APPROVED
721	T:\149332\Rev270\1052199-270.dwg	5/3/2010	M. Nguyen
0.1_M.2		04/13/26	A.ABENGOZA

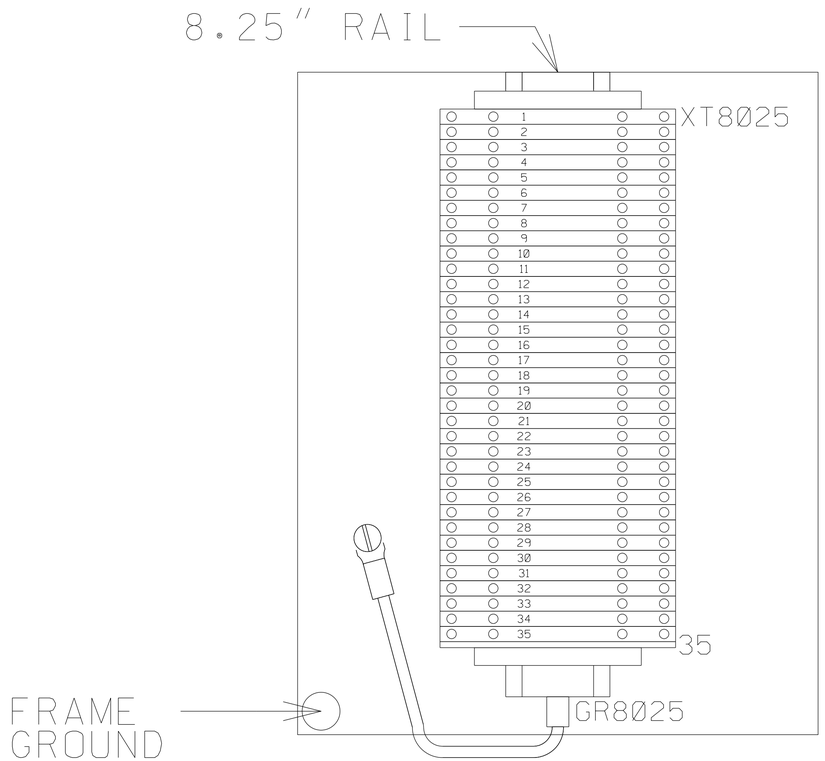

REV 0.1_M.2:
-ADDED PAGE JB BOX and LAYOUT
D46368 13-APR-2026

JB4
SPRING
BOX:981546C1
PANEL:981063C1

CATERPILLAR CONFIDENTIAL GREEN
"THIS COPYRIGHTED WORK AND THE INFORMATION HEREIN IS PROPRIETARY TO CATERPILLAR INC., SOLAR TURBINES INCORPORATED, AND/OR SUBSIDIARIES OF EITHER. WITHOUT EXPRESS WRITTEN PERMISSION FROM CATERPILLAR INC. OR SOLAR TURBINES INCORPORATED, ANY COPYING, DISCLOSURE, OR USE EXCEPT THAT FOR WHICH IT IS LOANED, IS PROHIBITED."

DATA CONTROL LEVEL 1	RELEASE STAMP PD-J1640	SIZE D	CAGE NO. 66195	Solar Turbines A Caterpillar Company	P.O. BOX 85376 San Diego, California 92186-5376
		MFG DES ENGINEER A.ABENGOZA	DATE 11/21/25	DRAWING TITLE INTERCONNECT BOX PANEL JB4	
		DESIGN ENGINEER D.JOHN	DATE 11/21/25		
PROJECT NAME TALOS EW1003 PRINCE				PANEL NO. 1052199	
MODEL CTLM02 TURBOTRONICS 4				DWG NO. J1640-149448	0.1_M.2
LOC T:\PROJECT\LAYOUT\REV\				DWG REV 0.1_M.2	SHEET 16 OF 18

THIS PRINT IS PROVIDED ON A RESTRICTED BASIS AND IS NOT TO BE USED IN ANY WAY DETRIMENTAL TO SOLAR TURBINES INCORPORATED.

REVISION HISTORY

REV	DESCRIPTION	DATE	APPROVED
721	T:\149332\Rev270\1052199-270.dwg	5/3/2010	M. Nguyen
0.1_M.2		04/10/26	A.ABENGOZA

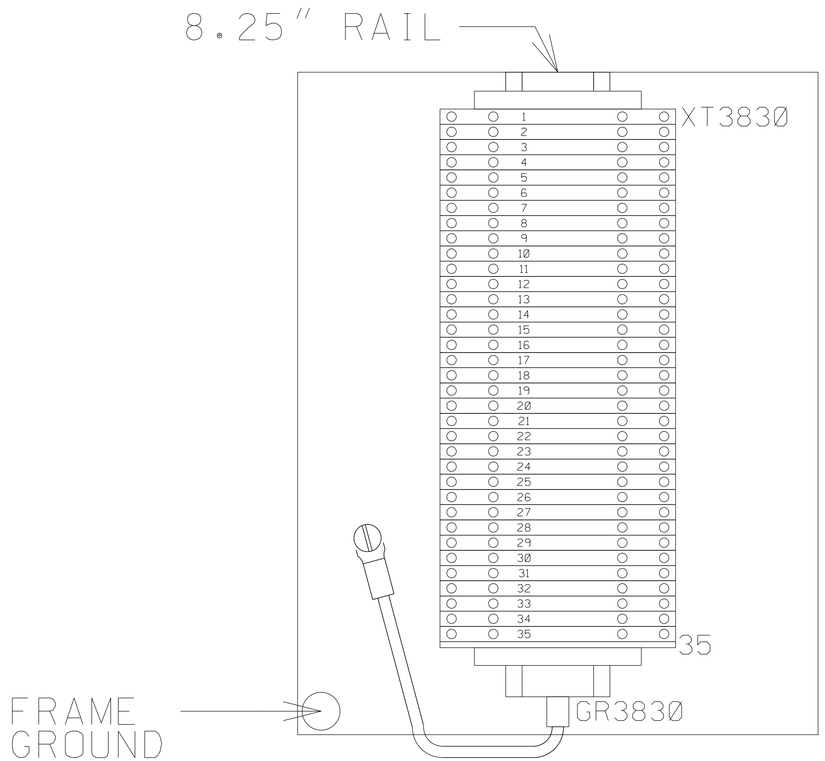

REV 0.1_M.2:
-ADDED PAGE JB BOX and LAYOUT
D46368 13-APR-2026

JB30
SPRING
BOX:981546C1
PANEL:981063C1

CATERPILLAR CONFIDENTIAL GREEN
"THIS COPYRIGHTED WORK AND THE INFORMATION HEREIN IS PROPRIETARY TO CATERPILLAR INC., SOLAR TURBINES INCORPORATED, AND/OR SUBSIDIARIES OF EITHER. WITHOUT EXPRESS WRITTEN PERMISSION FROM CATERPILLAR INC. OR SOLAR TURBINES INCORPORATED, ANY COPYING, DISCLOSURE, OR USE EXCEPT THAT FOR WHICH IT IS LOANED, IS PROHIBITED."

DATA CONTROL LEVEL: 1	RELEASE STAMP PD-J1640	SIZE: D	CAGE NO. 66195	Solar Turbines, A Caterpillar Company	P.O. BOX 85376 San Diego, California 92186-5376
		MFG DES ENGINEER: A.ABENGOZA	DATE: 11/21/25	DRAWING TITLE: INTERCONNECT BOX PANEL JB30	
		DESIGN ENGINEER: D.JOHN	DATE: 11/21/25		
PROJECT NAME: TALOS EW1003 PRINCE				PANEL NO. 1052199	
MODEL: CTLM02 TURBOTRONICS 4				DWG NO. J1640-149448	0.1_M.2
LOC: T:\PROJECT\LAYOUT\REV\				DWG REV 0.1_M.2	SHEET 17 OF 18

THIS PRINT IS PROVIDED ON A RESTRICTED BASIS AND IS NOT TO BE USED IN ANY WAY DETRIMENTAL TO SOLAR TURBINES INCORPORATED.

REVISION HISTORY

REV	DESCRIPTION	DATE	APPROVED
721	T:\149332\Rev270\1052199-270.dwg	5/3/2010	M. Nguyen
0.1_M.2		04/10/26	A.ABENGOZA

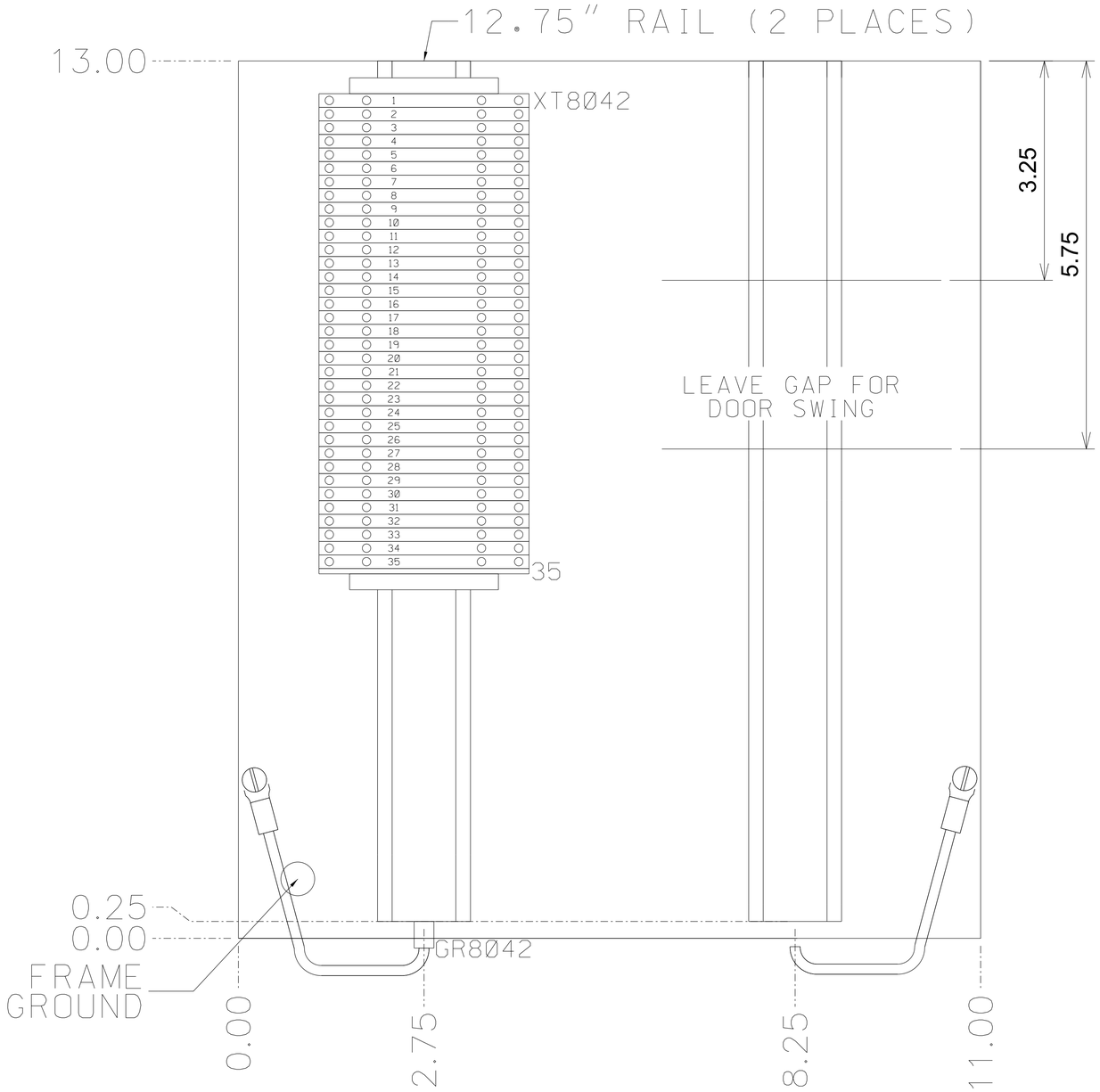

REV 0.1_M.2:
-ADDED PAGE JB BOX and LAYOUT
D46368 13-APR-2026

JB352
SPRING
BOX:1057018-3
PANEL:1058112-1900

CATERPILLAR CONFIDENTIAL GREEN
"THIS COPYRIGHTED WORK AND THE INFORMATION HEREIN IS PROPRIETARY TO CATERPILLAR INC., SOLAR TURBINES INCORPORATED, AND/OR SUBSIDIARIES OF EITHER, WITHOUT EXPRESS WRITTEN PERMISSION FROM CATERPILLAR INC. OR SOLAR TURBINES INCORPORATED, ANY COPYING, DISCLOSURE, OR USE EXCEPT THAT FOR WHICH IT IS LOANED, IS PROHIBITED."

DATA CONTROL LEVEL	RELEASE STAMP	SIZE	CAGE NO.		
1	PD-J1640	D	66195	Solar Turbines A Caterpillar Company	P.O. BOX 85376 San Diego, California 92186-5376
		MFG DES ENGINEER: A.ABENGOZA	DATE: 11/21/25	DRAWING TITLE: INTERCONNECT BOX PANEL JB352	
		DESIGN ENGINEER: D.JOHN	DATE: 11/21/25		

PROJECT NAME: TALOS EW1003 PRINCE
PANEL NO. 1052199
DWG NO. J1640-149448 0.1_M.2
MODEL CTLM02 TURBOTRONICS 4
LOC T:\PROJECT\LAYOUT\REV\
DWG REV 0.1_M.2
SHEET 18 OF 18